G4-C2G1

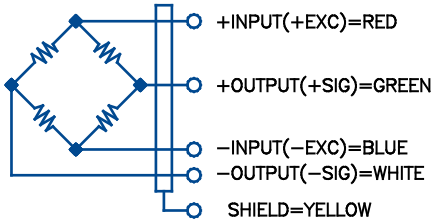

SPECIFICATIONS

Excitation (VDC)	10 Nom 15 Max
Rated Output (mV/V)	2.0±0.2
Zero Balance (%FS)	0.1
Terminal Resistance:	
Input (Ω)	420±30
Output (Ω)	350±5
Combined Error (%FS)	0.03
Non-repeatability (%FS)	0.02
Creep 20 min. (%load)	0.02
Temperature Range	
Compensated (°F)	14 to 122
Operating (°F)	14 to 122
Temperature Effect:	
Zero Balance (%FS/10°C)	0.04
Output (%load/10°C)	0.007
Seal	Environmentally sealed/ IP67
Safe Overload (%FS)	150
Ultimate Overload (%FS)	200
Material	Aluminum; Clear anodized
Cable Length	15.7in (400mm)

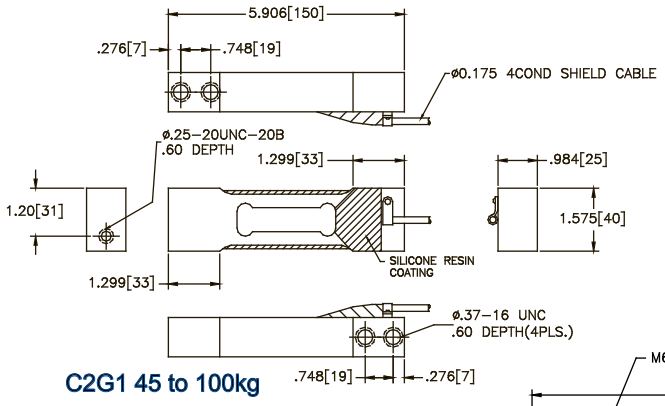

C2G1 45 to 100kg

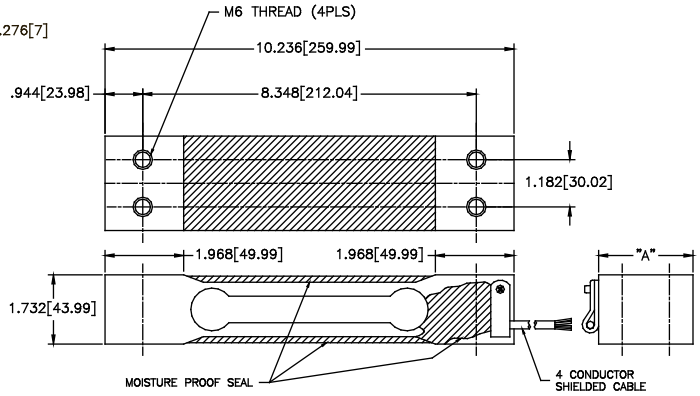

C2G1 6 to 35kg

Capacity	"A"
6 – 20kg	1.181
25 – 35kg	1.575

22 Deer Park Dr. E. Longmeadow, MA 01028 800-419-1444 Fax 413-525-6182 groupfourtransducers.com